SHAFER
ZAHNER
ZAHNER
OFFICE OF ARCHITECTURE

Date: November 4, 2025

GS# 104-215 Jones Hall Interior Renovations (RE-BID)
Mississippi University for Women

Addendum No. 2

This addendum forms part of the Contract Documents for the above referenced project. All other requirements of the original Contract Documents shall remain in effect except as specifically modified in this addendum. Bidder is to acknowledge receipt of this addendum with their bid. Failure to do so may subject the Bidder to disqualification.

The following additions, changes, clarifications and/or substitutions to the Project Drawings/Specifications as indicated are hereby made a part of the Contract Documents. Acknowledge receipt of this Addendum by inserting its number and date in the Proposal Form where indicated.

Item No. 1: Specifications: Revised Spec. 284600 – Fire Detection and Alarm section 3.04 "PATHWAYS" note B.

Item No. 2: Drawing, Sheet MD101: Revised note for under floor transfer duct as shown on attached Drawing MD101R1

Item No. 3: Drawings: Revise Sheet E005 and replace with attached Sheet E005. Revisions included updating Utility primary feeder note.

Item No. 4: Drawings: Revise Sheet E009 and replace with attached Sheet E009: Revisions included updating site plan power and feeder notes.

Item No. 5: Drawings: Revise Sheet E401 and replace with attached Sheet E401: Revisions included updating fire alarm general notes to match current drawing specifications.

Approval of a Manufacturer or product as an "equal" does not in any way alter the Contract Documents. Any approved manufacturer must accommodate construction details, required finishes, owner's specific requirements, adjacent materials, etc. Any additional materials or components required by the "approved equal" for proper installation for the given conditions are the responsibility of the Contractor. Approval of a Manufacturer also shall not cause an up-charge for the desired finish or limit the choices of finishes, colors, materials, etc. Field measurement of existing conditions for the installation of items is the responsibility of the Contractor.

Contents: This addendum consists of **20** (8 ½" x 11") sheets and **4** (24" x 36") drawings - (including this page).

SHAFER
ZAHNER
ZAHNER
OFFICE OF ARCHITECTURE

End of Addendum No. 2 for: Jones Hall Interior Renovations (RE-BID)

REGISTERED ARCHITECT
Sally S. Zahner
4573
11/4/2025
STATE OF MISSISSIPPI

DONALD L. GREEN
REGISTERED PROFESSIONAL
No. 13816
ENGINEER
11/04/25
STATE OF MISSISSIPPI

ALFRED MICHAEL MAIOLA III
LICENSED PROFESSIONAL
ENGINEER
34960
11/04/25
STATE OF MISSISSIPPI

SECTION 284600

FIRE DETECTION AND ALARM

PART 1 GENERAL

1.01 SECTION INCLUDES

A. Fire alarm system design and installation, including all components, wiring, and conduit.

B. Transmitters for communication with supervising station.

C. Replacement and removal of existing fire alarm system components, wiring, and conduit indicated.

1.02 RELATED REQUIREMENTS

A. Section 260500- Common Work Results for Electrical Systems

B. Section 260519- Low-Voltage Electrical Power Conductors and Cables

C. Section 260526- Grounding and Bonding for Electrical Systems

D. Section 260533.13 Conduit for Electrical Systems

E. Section 260533.16 Boxes for Electrical Systems

F. Section 260553 – Identification for Electrical Systems.

1.03 REFERENCE STANDARDS

A. 36 CFR 1191 - Americans with Disabilities Act (ADA) Accessibility Guidelines for Buildings and Facilities; Architectural Barriers Act (ABA) Accessibility Guidelines current edition.

B. ADA Standards - 2010 ADA Standards for Accessible Design 2010.

C. IEEE C62.41.2 - IEEE Recommended Practice on Characterization of Surges in Low-Voltage (1000 V and less) AC Power Circuits 2002 (Corrigendum 2012).

D. NFPA 70 - National Electrical Code Most Recent Edition Adopted by Authority Having Jurisdiction, Including All Applicable Amendments and Supplements.

E. NFPA 72 - National Fire Alarm and Signaling Code Most Recent Edition Cited by Referring Code or Reference Standard.

F. NFPA 76 - Standard for the Fire Protection of Telecommunications Facilities 2020.

G. NFPA 101 - Life Safety Code Most Recent Edition Adopted by Authority Having Jurisdiction, Including All Applicable Amendments and Supplements.

H. NFPA 601 - Standard for Security Services in Fire Loss Prevention 2020.

I. NFPA 1221- Standard for the Installation, Maintenance, and Use of Emergency Services Communications Systems.

J. UL 38 – Standard for Manual Signaling Boxes for Fire Alarm Systems

K. UL 268 - Standard for Smoke Detectors for Fire Alarm Systems Current Edition, Including All Revisions.

L. UL 1480 - Speakers for Fire Alarm and Signaling Systems

1.04 SUBMITTALS

A. Proposal Documents: Submit the following with cost/time proposal:
   1. NFPA 72 "Record of Completion", filled out to the extent known at the time.
   2. Manufacturer's detailed data sheet for each control unit, initiating device, and notification appliance.
   3. Certification by Contractor that the system design will comply with Contract Documents.
   4. Proposed maintenance contract.

B. Drawings must be prepared using AutoCAD Release 2010 or Newer.

1. Owner will provide floor plan drawings for Contractor's use; verify all dimensions on Owner-provided drawings.

C. Evidence of designer qualifications.

D. Design Documents: Submit all information required for plan review and permitting by authorities having jurisdiction, including but not limited to floor plans, riser diagrams, and description of operation:
   1. Copy (if any) of list of data required by authority having jurisdiction.
   2. NFPA 72 "Record of Completion", filled out to the extent known at the time.
   3. Clear and concise description of operation, with input/output matrix like that shown in NFPA 72 Appendix A-7-5-2.2(9), and complete listing of software required.
   4. System zone boundaries and interfaces to fire safety systems.
   5. Location of all components, circuits, and raceways; mark components with identifiers used in control unit programming.
   6. Circuit layouts; number, size, and type of raceways and conductors; conduit fill calculations; spare capacity calculations; notification appliance circuit voltage drop calculations.
   7. List of all devices on each signaling line circuit, with spare capacity indicated.
   8. Manufacturer's detailed data sheet for each component, including wiring diagrams, installation instructions, and circuit length limitations.
   9. Description of power supplies; if secondary power is by battery include calculations demonstrating adequate battery power.
   10. Detailed drawing of graphic annunciator(s).
   11. Certification by either the manufacturer of the control unit or by the manufacturer of each other component that the components are compatible with the control unit.
   12. Certification by the manufacturer of the control unit that the system design complies with Contract Documents.
   13. Certification by Contractor that the system design complies with Contract Documents.
   14. Do not show existing components to be removed.

E. Evidence of installer qualifications.

F. Evidence of instructor qualifications; training lesson plan outline.

G. Inspection and Test Reports:
   1. Submit inspection and test plan prior to closeout demonstration.
   2. Submit documentation of satisfactory inspections and tests.
   3. Submit NFPA 72 "Inspection and Test Form," filled out.

H. Operating and Maintenance Data: have one set available during closeout demonstration:
   1. Original copy of NFPA 72 with portions that are not relevant to this project neatly crossed out by hand; label with project name and date.
   2. Complete set of specified design documents, as approved by authority having jurisdiction.
   3. Additional printed set of project record documents and closeout documents, bound or filed in same manuals.
   4. List of recommended spare parts, tools, and instruments for testing.
   5. Replacement parts list with current prices, and source of supply.
   6. Detailed troubleshooting guide and large scale input/output matrix.
   7. Preventive maintenance, inspection, and testing schedule complying with NFPA 72; provide printed copy and computer format acceptable to Owner.
   8. Detailed but easy to read explanation of procedures to be taken by non-technical administrative personnel in the event of system trouble, when routine testing is being conducted, for fire drills, and when entering into contracts for remodeling.

I. Project Record Documents: have one set available during closeout demonstration:
   1. Complete set of floor plans showing actual installed locations of components, conduit, and zones.
   2. "As installed" wiring and schematic diagrams, with final terminal identifications.

3. "As programmed" operating sequences, including control events by device, updated input/output chart, and voice messages by event.

J. Closeout Documents:
1. Certification by manufacturer that the system has been installed in compliance with manufacturer's installation requirements, is complete, and is in satisfactory operating condition.
2. NFPA 72 "Record of Completion", filled out completely and signed by installer and authorized representative of authority having jurisdiction.
3. Certificate of Occupancy.
4. Report on training results.

K. Maintenance Materials, Tools, and Software: Furnish the following for Owner's use in maintenance of project.
1. Furnish spare parts of same manufacturer and model as those installed; deliver in original packaging, labeled in same manner as in operating and maintenance data and place in spare parts cabinet.
2. In addition to the items in quantities indicated in PART 2, furnish the following:
a. All tools, software, and documentation necessary to modify the fire alarm system using Owner's personnel; minimum modification capability to include addition and deletion of devices, circuits, and zones, and changes to system description, operation, and evacuation and instructional messages.
b. One copy, on CD-ROM, of all software not resident in read-only-memory.
c. Extra Fuses: Two for each installed fuse; store inside applicable control cabinet.

1.05 QUALITY ASSURANCE

A. Copies of Design Criteria Documents: Maintain at the project site for the duration of the project, bound together, an original copy of NFPA 72, the relevant portions of applicable codes, and instructions and guidelines of authorities having jurisdiction; deliver to Owner upon completion.

B. Designer Qualifications: NICET Level III or IV (3 or 4) certified fire alarm technician or registered fire protection engineer, employed by fire alarm control panel manufacturer, Contractor, or installer, with experience designing fire alarm systems in the jurisdictional area of the authorities having jurisdiction.

C. Installer Qualifications: Firm with minimum 3 years documented experience installing fire alarm systems of the specified type and providing contract maintenance service as a regular part of their business.
1. Authorized representative of control unit manufacturer; submit manufacturer's certification that installer is authorized; include name and title of manufacturer's representative making certification.
2. Installer Personnel: At least 2 years of experience installing fire alarm systems.
3. Supervisor: NICET level III or IV (3 or 4) certified fire alarm technician; furnish name and address.
4. Contract maintenance office located within 120 miles of project site.
5. Certified in the State in which the Project is located as fire alarm installer.

D. Instructor Qualifications: Experienced in technical instruction, understanding fire alarm theory, and able to provide the required training; trained by fire alarm control unit manufacturer.

E. Product Listing Organization Qualifications: An organization recognized by OSHA as a Nationally Recognized Testing Laboratory (NRTL) and acceptable to authorities having jurisdiction.

1.06 WARRANTY

A. Provide control panel manufacturer's warranty that system components other than wire and conduit are free from defects and will remain so for 1 year after date of Substantial Completion.

B. Provide installer's warranty that the installation is free from defects and will remain so for 1 year after date of Substantial Completion.

PART 2 PRODUCTS

2.01 MANUFACTURERS

A. Fire Alarm Control Units, Initiating Devices and Notification Appliances, and Accessories:
   1. Honeywell Security & Fire Solutions/Notifier.
   2. Siemens Building Technologies, Inc.
   3. Edwards
   4. Provide control units made by the same manufacturer.

B. Substitutions:
   1. For other acceptable manufacturers of control units specified, submit product data showing equivalent features and compliance with Contract Documents.
   2. For substitution of products by manufacturers not listed, submit product data showing features and certification by Contractor that the design will comply with Contract Documents.

2.02 FIRE ALARM SYSTEM

A. Fire Alarm System: Provide a new fire detection and alarm system:
   1. Provide all components necessary, regardless of whether shown in Contract Documents or not.
   2. Protected Premises: Entire building shown on drawings.
   3. Comply with the following; where requirements conflict, order of precedence of requirements is as listed:
      a. ADA Standards.
      b. The requirements of the State Fire Marshal.
      c. The requirements of the local authority having jurisdiction.
      d. Applicable local codes.
      e. Contract Documents (drawings and specifications).
      f. NFPA 101.
      g. NFPA 72; where the word "should" is used consider that provision mandatory; where conflicts between requirements require deviation from NFPA 72, identify deviations clearly on design documents.
   4. Initiation: Manual and Automatic.
   5. Notification: Provide audible and visual alarm
   6. Program notification zones and voice messages as directed by Owner.
   7. Hearing Impaired Occupants: Provide visible notification devices in all common public areas. Comply with the requirements of the ADA.
   8. Fire Alarm Control Unit: Location indicated on the Drawings.
   9. Reporting to Supervising Station: Dedicated leased telephone lines for connection to a monitoring company service via digital alarm communication transmitter (DACT)
   10. Combined Systems: Do not combine fire alarm system with other non-fire systems.

B. Supervising Stations and Fire Department Connections:
   1. Public Fire Department Notification: By on-premises supervising station.
   2. Remote Supervising Station: UL-listed central station under contract to facility.
   3. Means of Transmission to Remote Supervising Station: Digital alarm communicator transmitter (DACT), 2 dedicated leased telephone lines.
   4. Means of Transmission to Remote Supervising Station: Via cellular dialer.

C. Circuits:
   1. Initiating Device Circuits (IDC): Class A.
   2. Signaling Line Circuits (SLC)Within Single Building: Class A.
   3. Signaling Line Circuits (SLC) Between Buildings: Class A, Style 2.
   4. Notification Appliance Circuits (NAC): Class A.

D. Spare Capacity:
   1. Initiating Device Circuits: Minimum 25 percent spare capacity.

2. Notification Appliance Circuits: Minimum 25 percent spare capacity.
3. Fire Alarm Control Units: Capable of handling all circuits utilized to capacity without requiring additional components other than plug-in control modules.

E. Power Sources:
1. Primary: Dedicated branch circuits of the facility power distribution system.
2. Secondary: Storage batteries.
3. Capacity: Sufficient to operate entire system for period specified by NFPA 72 for minimum 24 hours standby condition and 15 minutes of alarm condition.
4. Each Computer System: Provide uninterruptible power supply (UPS).

2.03 FIRE SAFETY SYSTEMS INTERFACES

A. Supervision: Provide supervisory signals in accordance with NFPA 72 for the following:
1. Sprinkler water control valves.
2. Elevator shut-down control circuits.

B. Alarm: Provide alarm initiation in accordance with NFPA 72 for the following:
1. Sprinkler water flow.
2. Kitchen hood suppression activation; also disconnect fuel source from cooking equipment.
3. Elevator lobby, elevator hoistway, and elevator machine room smoke detectors.
4. Duct smoke detectors.

C. Elevators:
1. Elevator lobby, hoistway, and machine room smoke detectors: Elevator recall for fire fighters' service.
2. Elevator Machine Room Heat Detector: Shut down elevator power prior to hoistway sprinkler activation.
3. Sprinkler pressure or waterflow: Shut down elevator power prior to hoistway sprinkler activation.

D. HVAC:
1. Duct Smoke Detectors: Close dampers indicated; shut down air handlers indicated.

E. Doors:
1. Smoke Barrier Door Magnetic Holders: Release upon activation of smoke detectors in smoke zone on either side of door, upon alarm from manual pull station on same floor, and upon sprinkler activation on same floor. Refer to Section 087100.
2. Electromagnetic Door Locks on Egress Doors: Unlock upon activation of any alarm initiating device or suppression system in smoke zone that doors serve as egress from. Refer to Section 087100.

F. Addressable Devices:
1. Addressable devices shall use simple to install and maintain decade, decimal address switches. Devices shall be capable of being set to an address in a range of 001 to 159.
2. Addressable devices, which use a binary-coded address setting method, such as a dip-switch, are not an allowable substitute. Addressable devices that require the address be programmed using a special tool or programming utility are not an allowable substitute.
3. Detectors shall be intelligent (analog) and addressable and shall connect with two wires to the fire alarm control panel signaling line circuits.
4. Addressable smoke and thermal detectors shall provide dual alarm and power/polling LEDS Both LEDS shall flash green under normal conditions, indicating that the detector is operational and in regular communication with the control panel, and both LEDS shall be placed into steady red illumination by the control panel, indicating that an alarm condition has been detected. If required, the led flash shall have the ability to be removed from the system program. An output connection shall also be provided in the base to connect an external remote alarm led.

5. The fire alarm control panel shall permit detector sensitivity adjustment through field programming of the system. The panel on a time-of-day basis shall automatically adjust sensitivity.
6. Using software in the FACP, detectors shall automatically compensate for dust accumulation and other slow environmental changes that may affect their performance. The detectors shall be listed by UL as meeting the calibrated sensitivity test requirements of NFPA 72.
7. The detectors shall be ceiling-mount and shall include a separate twist-lock base with tamper proof feature. Base options shall include a sounder base with a built-in (local) sounder rated at 85 dba minimum, a relay base and an isolator base designed for style 7 applications.

2.04 COMPONENTS

A. General:
   1. Provide flush mounted units where installed in finish areas; in unfinished areas, surface mounted unit are acceptable.
   2. Provide legible, permanent labels for each control device, using identification used in operation and maintenance data.

B. Fire Alarm Control Units: Analog, addressable type; listed, classified, and labeled as suitable for the purpose intended.

C. Addressable Fire Alarm Control Unit:
   1. System Capacity: 4,064 addresses; six notification appliance circuits (NACs), expandable to 192; four input/output (I/O) circuits; 1,500 software zones.
   2. Features: Strobe synchronization; dedicated alarm, supervisory and trouble relays; 4,000 event history buffer; built-in IP communicator; Ethernet port for programming and network connectivity; e-mail system status, reports and event information.

D. Addressable Modules:
   1. Provide addressable modules suitable for connection to fire alarm control unit signaling line circuits.
   2. Unless otherwise indicated, use addressable modules only in clean, dry, indoor, nonhazardous locations.
   3. Monitor Modules: Unless devices are explicitly permitted to be connected together as zone, provide separate addressable monitor module for each conventional dry-contact input device in order to be individually identifiable by addressable fire alarm control unit.
   4. Control Modules: Provide as indicated or as required for selective control of notification appliances.
   5. Releasing Control Modules: Provide as indicated or as required for control of listed solenoids in releasing applications.
   6. Relay Modules: Provide as indicated or as required to perform necessary functions via dry-contact interface. Where load exceeds module contact rating, provide accessory power isolation relays suitable for load as required.
   7. Signaling Line Circuit (SLC) Isolating Modules: Provide as indicated or as required to automatically isolate short circuits on connected sections of SLC loops and allow other sections to continue to function normally. Provide automatic reset upon correction of short circuit.
   8. Products:
      a. Ruskin Company; ADC105 Addressable Damper Controller for Simplex Panels: www.ruskin.com/#sle.

E. Initiating Devices:
   1. Addressable Systems:
      a. Addressable Devices: Individually identifiable by addressable fire alarm control unit.
      b. Provide suitable addressable interface modules as indicated or as required for connection to conventional (non-addressable) devices and other components that provide a dry closure output.

F. Manual Pull Stations: Comply with UL 38. Boxes shall be finished in red with molded, raised-letter operating instructions in contrasting color; shall show visible indication of operation; and shall be mounted on recessed outlet box. If indicated as surface mounted, provide manufacturer's surface back box.
   1. Double-action mechanism requiring two actions to initiate an alarm, pull-lever type; with integral or attached addressable module arranged to communicate manual-station status (normal, alarm, or trouble) to fire-alarm control unit.
   2. Station Reset: Key- or wrench-operated switch.

G. System Smoke Detectors
   1. General Requirements for System Smoke Detectors:
      a. Comply with UL 268, current accepted edition operating at 24-V dc, nominal.
      b. Detectors shall be two-wire type,
      c. Integral Addressable Module: Arranged to communicate detector status (normal, alarm, or trouble) to fire-alarm control unit.
      d. Base Mounting: Detector and associated electronic components shall be mounted in a twist-lock module that connects to a fixed base. Provide terminals in the fixed base for connection to building wiring.
      e. Self-Restoring: Detectors do not require resetting or readjustment after actuation to restore them to normal operation.
      f. Integral Visual-Indicating Light: LED type, indicating detector has operated and communication status.
      g. Remote Control: Unless otherwise indicated, detectors shall be digital-addressable type, individually monitored at fire-alarm control unit for calibration, sensitivity, and alarm condition and individually adjustable for sensitivity by fire-alarm control unit.
      h. Rate-of-rise temperature characteristic of combination smoke- and heat-detection units shall be selectable at fire-alarm control unit for 15 or 20 deg F (8 or 11 deg C) per minute.
      i. Fixed-temperature sensing characteristic of combination smoke- and heat-detection units shall be independent of rate-of-rise sensing and shall be settable at fire-alarm control unit to operate at 135 or 155 deg F (57 or 68 deg C).
      j. Multiple levels of detection sensitivity for each sensor.
      k. Sensitivity levels based on time of day.
      l. If any specialized equipment must be used to program any function of the smoke detector devices, then one must be furnished as part of the system.

H. Photoelectric Smoke Detectors
   1. Detector address shall be accessible from fire-alarm control unit and shall be able to identify the detector's location within the system and its sensitivity setting.
   2. An operator at fire-alarm control unit, having the designated access level, shall be able to manually access the following for each detector including primary status, device type, present average value, present sensitivity selected, and sensor range (normal, dirty, etc).

I. Duct Smoke Detectors: Photoelectric type complying with UL 268A
   1. Detector address shall be accessible from fire-alarm control unit and shall be able to identify the detector's location within the system and its sensitivity setting.
   2. An operator at fire-alarm control unit, having the designated access level, shall be able to manually access the following for each detector including primary status, device type, present average value, present sensitivity selected, and sensor range (normal, dirty, etc),
   3. Weatherproof Duct Housing Enclosure: NEMA 250, Type 4X; NRTL listed for use with the supplied detector for smoke detection in HVAC system ducts.
   4. Each sensor shall have multiple levels of detection sensitivity.
   5. Sampling Tubes: Design and dimensions as recommended by manufacturer for specific duct size, air velocity, and installation conditions where applied.
   6. Auxiliary function control is to be by discrete addressable control relay.

J. Carbon Monoxide Detectors

1. General: Carbon monoxide detector listed for connection to fire-alarm system.
2. Mounting: Adapter plate for outlet box mounting.
   a. Testable by introducing test carbon monoxide into the sensing cell.
   b. Detector shall provide alarm contacts and trouble contacts.
   c. Detector shall send trouble alarm when nearing end-of-life, power supply problems, or internal faults.
   d. Comply with UL 2075.
   e. Locate, mount, and wire according to manufacturer's written instructions.
   f. Provide means for addressable connection to fire-alarm system.
   g. Test button simulates an alarm condition.

K. Multi-Criteria Detectors
1. Mounting: Adapter plate for outlet box mounting or Twist-lock base interchangeable with smoke-detector bases.
2. Integral Addressable Module: Arranged to communicate detector status (normal, alarm, or trouble) to fire-alarm control unit.
3. Automatically adjusts its sensitivity by means of drift compensation and smoothing algorithms. The detector shall send trouble alarm if it is incapable of compensating for existing conditions.
4. Test button tests all sensors in the detector.
5. An operator at fire-alarm control unit, having the designated access level, shall be able to manually access the following for each detector including primary status, device type, present sensitivity selected, and sensor range (normal, dirty, etc.).
6. Sensors: The detectors shall comply with UL 268 7th edition.

L. Heat Detectors
1. General Requirements for Heat Detectors: Comply with UL 521.
   a. Temperature sensors shall test for and communicate the sensitivity range of the device.
   b. Heat Detector, Combination Type: Actuated by either a fixed temperature of 135 deg F (57 deg C) or a rate of rise that exceeds 15 deg F (8 deg C) per minute unless otherwise indicated.
      1) Adapter plate for outlet box mounting or Twist-lock base interchangeable with smoke-detector bases.
      2) Integral Addressable Module: Arranged to communicate detector status (normal, alarm, or trouble) to fire-alarm control unit.
   c. Heat Detector, Fixed-Temperature Type: Actuated by temperature that exceeds a fixed temperature of 190 deg F (88 deg C).
      1) Mounting: Adapter plate for outlet box mounting or Twist-lock base interchangeable with smoke-detector bases.
      2) Integral addressable Module: Arranged to communicate detector status (normal, alarm, or trouble) to fire-alarm control unit.
   d. Continuous Linear Heat-Detector System:
      1) Detector Cable: Rated detection temperature 155 deg F (68 deg C). Listed for "regular" service and a standard environment. Cable includes two steel a actuator wires twisted together with spring pressure, wrapped with protective tape, and finished with PVC outer sheath. Each actuator wire is insulated with heat-sensitive material that reacts with heat to allow the cable twist pressure to short circuit wires at the location of elevated temperature.
      2) Control Unit: Two-zone or multizone unit as indicated. Provide same system power supply, supervision, and alarm features as specified for fire-alarm control unit.
      3) Signals to Fire-Alrm Control Unit: Any type of local system trouble shall be reported to fire-alarm control unit as a composite "trouble" signal. Alarms on each detection zone shall be individually reported to central fire-alarm control unit as separately identified zones.

4) Integral Addressable Module: Arranged to communicate detector status (normal, alarm, or trouble) to fire-alarm control unit.

2. Designers and panel / pipe installers shall have OEM certifications included in the submittal package.
3. General Description:
   a. Provide two levels of alarm from each zone covered by the detector and two supervisory levels of alarm from each detector.
   b. Provide two levels of alarm from each zone covered by the detector and two supervisory levels of alarm from each detector.
   c. Provide two levels of alarm from each zone covered by the detector and two supervisory levels of alarm from each detector.
   d. Detectors shall have the capability via RS 485 to connect up to 100 detectors in a network.
      1) (5) Detectors shall communicate with the fire-alarm control unit via addressable, monitored dry contact closures, RS 485, and interface modules. Provide a minimum of six relays, individually programmable remotely for any function.
      2) (6) Pipe airflow balancing calculations shall be performed using approved calculation software.

M. Notification Appliances
1. General Requirements for Notification Appliances: Individually addressed, connected to a signaling-line circuit, equipped for mounting as indicated, and with screw terminals for system connections.
2. General Requirements for Notification Appliances: Connected to notification-appliance signal circuits, zoned as indicated, equipped for mounting as indicated, and with screw terminals for system connections.
3. Combination Devices: Factory-integrated audible and visible devices in a single-mounting assembly, equipped for mounting as indicated, and with screw terminals for system connections.
4. Horns: Electric-vibrating-polarized type, 24-V dc; with provision for housing the operating mechanism behind a grille. Comply with UL 464. Horns shall produce a sound-pressure level of 90 dBA, measured 10 feet (3 m) from the horn, using the coded signal prescribed in UL 464 test protocol.
5. Visible Notification Appliances: visuals complying with UL 1971, with clear or nominal white polycarbonate lens mounted on an aluminum faceplate. The word "FIRE" is engraved in minimum 1-inch- (25-mm-) high letters on the lens.
   a. Rated Light Output: 15/30/5/110/177 per drawings and field selectable.
   b. Mounting: Wall mounted unless otherwise indicated.
6. Dedicated, two-way, supervised, telephone voice communication links between fire-alarm control unit, the fire command center, and remote firefighters' telephone stations. Supervised telephone lines shall be connected to talk circuits by controls in a control module. Provide the following:
   a. Common-talk type for firefighter use only.
   b. Selective-talk type for use by firefighters and fire wardens.

N. Remote Annunciator
1. UL 864.
2. High-definition touchscreen display.
3. Programmer key switch for user authentication, providing the ability to enable the control inputs for acknowledge, silence, reset, and drill.
4. Configurable control buttons that are operational only when key switch is unlocked – Acknowledge – Silence – Reset – Drill.
5. Six programmable buttons, each with a descriptor/label, status indicator and configurable action (on/off, disable, enable)
6. Supervision of remote power supply

O. DIGITAL ALARM COMMUNICATOR TRANSMITTER
   1. Communications failure with the central station or fire-alarm control unit.
   2. Digital data transmission shall include the following:
      a. Address of the alarm-initiating device.
      b. Address of the supervisory signal.
      c. Address of the trouble-initiating device.
      d. Loss of ac supply.
      e. Loss of power,
      f. Low battery.
      g. Abnormal test signal.
      h. Communication bus failure.
   3. Secondary Power: Integral rechargeable battery and automatic charger.

P. Network Communications

Q. MAGNETIC DOOR HOLDERS
   1. Electromagnets: Require no more than 3 W to develop 25-lbf (111-N) holding force.
   2. Wall-Mounted Units: Flush mounted unless otherwise indicated.
   3. Rating: 24-V dc.
   4. The electromagnets shall be controlled by the FACU. Individual smoke detector auxiliary contacts shall not be used to release door holders.
   5. Material and Finish: Match door hardware

R. Circuit Conductors:
   1. Building wire - 14 AWG copper minimum. NAC circuits for speakers shall use conductors 14 AWG minimum, shielded and jacketed, plenum rated; provide 500 feet (60 m) extra; color code and label or each IDC and NAC conductor type.
   2. MC-FPLP Cable-Type THHN/THWN Insulated Copper #14 AWG minimum stranded and/or Type TFN Insulated 16/2 AWG minimum copper. Green insulated or tinned copper grounding conductor. UL Listed as Type MC and Type FPLP. 600 Volt Type MC and 300 Volt Type FPLP. Rated VW-1. Red Lightweight Aluminum Interlocked Armor.

S. Surge Protection: In accordance with IEEE C62.41.2 category B combination waveform and NFPA 70; except for optical fiber conductors.
   1. Equipment Connected to Alternating Current Circuits: Maximum let through voltage of 350 V(ac), line-to-neutral, and 350 V(ac), line-to-line; do not use fuses.
   2. Initiating Device Circuits, Notification Appliance Circuits, and Communications Circuits: Provide surge protection at each point where circuit exits or enters a building; rated to protect applicable equipment; for 24 V(dc) maximum dc clamping voltage of 36 V(dc), line-to-ground, and 72 V(dc), line-to-line.
   3. Signaling Line Circuits: Provide surge protection at each point where circuit exits or enters a building, rated to protect applicable equipment.

T. Locks and Keys: Deliver keys to Owner.
   1. Provide the same standard lock and key for each key operated switch and lockable panel and cabinet; provide 5 keys of each type
   2. Provide a different standard lock and key for each key operated alarm initiating device; provide 25 keys of each type.

U. Instruction Charts: Printed instruction chart for operators, showing steps to be taken when a signal is received (normal, alarm, supervisory, and trouble); easily readable from normal operator's station.
   1. Frame: Stainless steel or aluminum with polycarbonate or glass cover.
   2. Provide one for each control unit where operations are to be performed.
   3. Obtain approval of Owner prior to mounting; mount in location acceptable to Owner.
   4. Provide extra copy with operation and maintenance data submittal.

V. Storage Cabinet for Documentation: Steel with baked enamel finish, size appropriate to quantity of paper. Provide as required by NFPA 70.

1. Locate and clearly label within room of FACP.
2. Locate as directed by Edmonds Engineering, Inc.

W. Storage Cabinet for Spare Parts and Tools: Steel with baked enamel finish, size appropriate to quantity of parts and tools.
1. Padlock eye and hasp for lock furnished by Owner.
2. Locate as directed by Owner.

PART 3 EXECUTION

3.01 EXAMINATION

A. Examine areas and conditions for compliance with requirements for ventilation, temperature, humidity, and other conditions affecting performance of the Work.

B. Verify that manufacturer's written instructions for environmental conditions have been permanently established in spaces where equipment and wiring are installed, before installation begins.

C. Examine roughing-in for electrical connections to verify actual locations of connections before installation.

D. Proceed with installation only after unsatisfactory conditions have been corrected.

3.02 EQUIPMENT INSTALLATION

A. Comply with NFPA 72, NFPA 101, and requirements of authorities having jurisdiction for installation and testing of fire-alarm equipment. Install all electrical wiring to comply with requirements in NFPA 70 including, but not limited to, Article 760, "Fire Alarm Systems".

B. Devices placed in service before all other trades have completed cleanup shall be replaced.

C. Devices placed in service before all other trades have completed cleanup shall be replaced.
1. Connect new equipment to existing control panel in existing part of the building.
2. Expand, modify, and supplement existing control or monitoring equipment as necessary to extend existing control or monitoring functions to the new points. New components shall be capable of merging with existing configuration without degrading the performance of either system.
3. Install seismic bracing. Comply with requirements in Section 270548.16 "Seismic Controls for Communications Systems".
4. Install dowel rods to connect concrete base to concrete floor. Unless otherwise indicated, install dowel rods on 18-inch (460-mm) centers around the full perimeter of concrete base.
5. For supported equipment, install epoxy-coated anchor bolts that extend through concrete base and anchor into structural concrete floor.
6. Place and secure anchorage devices. Use setting drawings, templates, diagrams, instructions, and directions furnished with items to be embedded.
7. Install anchor bolts to elevations required for proper attachment to supported equipment.

D. Equipment Mounting: Install fire-alarm control unit on finished floor.

E. Install wall-mounted equipment, with tops of cabinets not more than 78 inches (1980 mm) above the finished floor.

F. Manual Fire-Alarm Boxes:
1. Install manual fire-alarm box in the normal path of egress within 60 inches (1520 mm) of the exit doorway.
2. Mount manual fire-alarm box on a background of a contrasting color.
3. The operable part of manual fire-alarm box shall be between 42 inches (1060 mm) and 48 inches (1220 mm) above floor level. All devices shall be mounted at the same height unless otherwise indicated.

G. Smoke- or Heat-Detector Spacing
1. Comply with the "Smoke-Sensing Fire Detectors" section in the "Initiating Devices" chapter in NFPA 72, for smoke-detector spacing.

2. Comply with the "Heat-Sensing Fire Detectors" section in the "Initiating Devices" chapter in NFPA 72, for heat-detector spacing.
3. Smooth ceiling spacing shall not exceed 30 feet (9m).
4. Spacing of detectors for irregular areas, for irregular ceiling construction, and for high ceiling areas shall be determined according to Annex A or Annex B in NFPA 72.
5. HVAC: Locate detectors not closer than 36 inches (910 mm) from air-supply diffuser or return-air opening.
6. Lighting Fixtures: Locate detectors not closer than 12 inches (300 mm) from any part of a lighting fixture and not directly above pendant mounted or indirect lighting.
7. When installed in a room, detectors shall be oriented, so their alarm light is visible from the nearest door to the corridor.

H. Install a cover on each smoke detector that is not placed in service during construction. Cover shall remain in place except during system testing. Remove cover prior to system turnover.

I. Duct Smoke Detectors: Comply with NFPA 72 and NFPA 90A. Install sampling tubes so they extend the full width of duct. Tubes more than 36 inches (9100 mm) long shall be supported at both ends. All air duct/plenum detectors must have a RAIL located in the nearest corridor or public area and identified by an engraved label affixed to the wall or ceiling. The label shall have the device address, function, and room location. These detectors shall be installed in a manner that provides suitable access for required periodic cleaning and calibration.
   1. Do not install smoke detector in duct smoke-detector housing during construction. Install detector only during system testing and prior to system turnover.

J. Duct detector sampling tubes shall extend the full width of the duct. Those over 36 inches long must be provided with rear support. The preferred method for doing this is to have the tube go through the far side of the duct, with the point of penetration tightly sealed to prevent air leakage around the tube. This facilitates smoke testing and tube cleaning. Duct smoke detector mounting position and air sampling tube orientation, are critical for proper operation. The Manufacturer's detailed installation instructions must be followed. The Contractor shall mark the direction of air flow on the duct at each duct detector location. Each duct detector installation shall have a hinged or latched access panel, 12”x12” minimum, for sampling tube inspection and cleaning. Coordinate with Mechanical Contractor.

K. Elevator Shafts: Coordinate temperature rating and location with sprinkler rating and location.

L. Remote Status and Alarm Indicators: Install in a visible location near each smoke detector, sprinkler water-flow switch, and valve-tamper switch that is not readily visible from normal viewing position.

M. Audible Alarm-Indicating Devices: Install not less than 6 inches (150 mm) below the ceiling. Install bells and horns on flush-mounted back boxes with the device-operating mechanism concealed behind a grille. Install all devices at the same height unless otherwise indicated.
   1. Remote Alarm Indicating Lights (RAIL): Locate in public space near the device they monitor. RAILS shall be labeled with device address, function and room location of device monitored.
   2. RAILs shall be provided with a key switch for testing of the duct detectors.

N. Antenna for Radio Alarm Transmitter: Mount to building structure where indicated. Use mounting arrangement and substrate connection that resists [100-mph (160-km/h)] wind load with a gust factor of 1.3 without damage.

O. Surge Protection Device (SPD): The system shall be equipped with the following protective devices to prevent damage or nuisance alarms by nearby lightning strikes, stray currents, or voltage transients. The devices are to be provided by the fire alarm equipment supplier:
   1. On AC Input of all panels: A feed-through (not a shunt-type) branch circuit transient arrestor. The SPD shall meet current electrical code for use on fire alarm equipment and have NRTL listings. Install in a listed enclosure near the electrical panelboard and trim excess lead lengths. Wind small coil in the branch circuit conductor, within panelboard,

downstream of the suppressor connection. Coil is to be about 1" diameter, 5 to 10 turns, and tie-wrapped.

2. On DC Circuits Extending Outside Building: Adjacent to the FACU, and also near point of entry to outlying building, provide "pi"-type filter on each leg, consisting of a primary arrestor, series impedance, and a fast-acting secondary arrestor which clamps between 30 and 40 Volts. Use models recommended by the Original Equipment Manufacturer (OEM).

P. FIRE ALARM SYSTEM INSTALLATION AND CONFIGURATION

1. Installation of the FACU and connection of all circuits shall be performed by persons meeting requirements listed in the Quality Assurance paragraph. All connections at the FACU must be made by the Manufacturer's authorized, factory trained representative (rather than by the electrical contractor).
2. All equipment and components shall be installed in strict compliance with manufacturers' recommendations. Consult the manufacturer's installation manuals for all wiring diagrams, schematics, physical equipment sizes, etc., before beginning system installation.

Q. The installing contractor will submit programmed point descriptors for owner preliminary approval. The approved descriptors will be programmed into the system before system testing to allow field verification. Final descriptor updates will be based on final testing review.

3.03 FIELD DEVICE LABELING

A. Labels shall be neatly applied black lettering on a clear background. Handwritten labels or labels made from embossed tape are not acceptable.

B. The location of all End of Line devices shall be labeled on the device, with NAC panel number and NAC circuit number. All notification devices shall be labeled.

C. The label will be permanently mount on each device so that it's readable standing on the floor below.

D. Devices above ceilings will have labels attached to the ceiling at location of access.

E. If the device is an isolator, then ISO will be a part of the label.

F. Pull stations will have the address on the top or front face.

G. Connections or cables in the FATC (FAJB) will be labeled with circuit numbers. Raceways feeding the FATC will be labeled with function / area served. 5th floor north, FATC 4th floor etc. Wires may be numbered with a printed schedule mounted in the FATC.

3.04 PATHWAYS

A. Pathways shall be installed concealed above accessible ceilings. Pathways in non-accessible locations may be routed exposed where noted or routed in Type MC-FPLP cable to assist in installation. Splices shall not be made between devices.

B. Circuit conductor pathways for building wire shall be installed in EMT.

C. Exposed pathways located less than 96 inches (2440 mm) above the floor shall be installed in surface mounted raceway (Wiremold) complying with complying with NEC article 760.

D. New EMT shall be identified as described in Section 260553. Existing raceway that is reused shall be marked every 10 feet with a red band or label stating fire alarm.

E. Class A SLC riser shall be run in two (2) separate conduits. Each leg of the circuit of the circuit shall be separated by a minimum of two (2) hour fire resistance rated construction, as shown on the drawings, and arranged such that severing one of the conduits will not put any portion of the system out of service. Should a two hour (2) separation be determined impractical by the COR or appointed representative, a physical separation distance of not less than 1 foot on a vertical plane and not less than 4 feet on a horizontal plane shall be achieved.

3.05 CONNECTIONS

A. For fire-protection systems related to doors in fire-rated walls and partitions and to doors in smoke partitions, comply with requirements in Section 087100 "Door Hardware." Connect hardware and devices to fire-alarm system.

B. Verify that hardware and devices are listed for use with installed fire-alarm system before making connections.

C. Cable Splices: Any and all cable splices shall be in hinged terminal cabinets only. No splicing of conductors in outlet or junction boxes. There shall be NO splices in the system other than at terminal blocks. "Wire nuts," crimp splices, or insulation piercing type connectors are not acceptable. All terminal block screws shall have pressure wire connectors of the self-lifting or box lug type. Permanent wire markers shall be used to identify all splices and terminations for each circuit. For splices, use markers or other means to indicate which conductors leads to the FACU.

D. Detection or alarm circuits shall not be installed in raceways containing AC power or AC control wiring. Within the FACP, any 120 VAC control wiring or other circuits with an externally supplied AC/DC voltage above the nominal 24 VDC system power must be properly separated from other circuits and the enclosure must have an appropriate warning label to alert service personnel to the potential hazard.

E. Provide an engraved label on FACP and all notification appliance circuit expansion panels identifying its 120 VAC power source. This label shall include panelboard identification and circuit number and panelboard location. This information shall also be provided inside panels.

F. Make addressable connections with a supervised interface device to the following devices and systems. Install the interface device less than 36 inches (910 mm) from the device controlled. Make an addressable confirmation connection when such feedback is available at the device and shown in system drawings.
   1. Smoke dampers in air ducts of designated HVAC duct systems.
   2. Magnetically held-open doors.
   3. Electronically locked doors and access gates.
   4. Alarm-initiating connection to elevator recall system and components.
   5. Alarm-initiating connection to activate emergency lighting control.
   6. Alarm-initiating connection to activate emergency shutoffs for gas and fuel supplies.
   7. Supervisory connections at valve supervisory switches.
   8. Supervisory connections at elevator shunt-trip breaker.
   9. Data communication circuits for connection to building management system.

3.06 IDENTIFICATION

A. Identify system components, wiring, cabling, and terminals. Comply with requirements for identification specified in Section 260553.

B. Install framed instructions in a location visible from fire-alarm control unit.

3.07 GROUNDING

A. Ground fire-alarm control unit and associated circuits; comply with IEEE 1100. Install a ground wire from main service ground to fire-alarm control unit.

3.08 FIELD QUALITY CONTROL

A. Field tests shall be witnessed by Engineer and authorities having jurisdiction

B. Manufacturer's Field Service: Engage a factory-authorized service representative to test and inspect components, assemblies, and equipment installations, including connections

C. Perform tests and inspections.

D. Perform the following tests and inspections:
   1. Visual Inspection: Conduct visual inspection prior to testing.

E. Inspection shall be based on completed record Drawings and system documentation that is required by the "Completion Documents, Preparation" table in the "Documentation" section of the "Fundamentals" chapter in NFPA 72.
   1. Comply with the "Visual Inspection Frequencies" table in the "Inspection" section of the "Inspection, Testing and Maintenance" chapter in NFPA 72; retain the "Initial/Reacceptance" column and list only the installed components.
   2. System Testing: Comply with the "Test Methods" table in the "Testing" section of the "Inspection, Testing and Maintenance" chapter in NFPA 72.
   3. Test audible appliances for the public operating mode according to manufacturer's written instructions. Perform the test using a portable sound-level meter complying with Type 2 requirements in ANSI S1.4.
   4. Test visible appliances for the public operating mode according to manufacturer's written instructions.
   5. Factory-authorized service representative shall prepare the "Fire Alarm System Record of Completion" in the "Documentation" section of the "Fundamentals" chapter in NFPA 72 and the "Inspection and Testing Form" in the "Records" section of the "Inspection, Testing and Maintenance" chapter in NFPA 72.
   6. Reacceptance Testing: Perform reacceptance testing to verify the proper operation of added or replaced devices and appliances.
   7. Fire-alarm system will be considered defective if it does not pass tests and inspections.
   8. Prepare test and inspection reports.
   9. Maintenance Test and Inspection: Perform tests and inspections listed for weekly, monthly, quarterly, and semiannual periods. Use forms developed for initial tests and inspections.
   10. Annual Test and Inspection: One year after date of Substantial Completion, test fire-alarm system complying with visual and testing inspection requirements in NFPA 72. Use forms developed for initial tests and inspections.

3.09 DEMONSTRATION

A. Train owner's maintenance personnel to adjust, operate, and maintain fire-alarm system. Multiple training sessions will be provided to meet owner’s needs for multiple shift training. Training sessions will include testing for retention of training.

3.10 TESTING

A. Pretesting: After installation, align, adjust, and balance the system and perform complete pretesting. Determine, through pretesting, the compliance of the system with requirements of Drawings and Specifications. Correct deficiencies observed in pretesting. Replace malfunctioning or damaged items with new ones, and retest until satisfactory performance and conditions are achieved. Prepare forms for systematic recording of acceptance test results.

B. Minimum System Tests: Minimum test shall be a 100% operation test including, but not limited to the following:

C. Verify the absence of unwanted voltages between circuit conductors and ground.

D. Test all conductors for short circuits using an insulation-testing device.

E. With each circuit pair, short circuit at the far end of the circuit and measure the circuit resistance with an ohmmeter. Record the circuit resistance of each circuit on record drawings.

F. Verify that the control unit is in the normal condition as detailed in the manufacturer's operation and maintenance manual.

G. Test initiating and indicating circuits for proper signal transmission under open circuit conditions. One connection each should be opened at not less than 10 percent of initiating and indicating devices. Observe proper signal transmission according to class of wiring used.

H. Test all initiating and indicating device for alarm operation and proper response at the control unit. Test smoke detectors with actual products of combustion.

I. All circuits shall be tested for supervision. “Class A” Signal Line Circuits shall be tested for “Class A” operation.

J. All sprinkler devices shall be tested for alarm, supervisory and trouble situations.

K. All control circuits (AHU shutdown, door holders, dampers) shall be tested for proper operation on an alarm condition and for wire supervision.

L. Elevator recall function shall be tested to ensure proper recall programming.

M. Check zone map for proper location of all devices. Verify that devices and wire are properly labeled. Verify that program descriptors match device location. Verify EOL locations with as built drawings.

N. Test the system for all specified functions according to the approved operation and maintenance manual. Systematically initiate specified functional performance items at each station, including making all possible alarm and monitoring initiations and using all communications options. For each item, observe related performance at all devices required to be affected by the item under all system sequences. Observe indicating lights, displays, signal tones, and annunciator indications. Observe all voice audio for routing, clarity, quality, freedom from noise and distortion, and proper volume level.

O. Test Both Primary and Secondary Power: Verify by test that the secondary power system is capable of operating the system for the period and in the manner specified.

P. Report of Pretesting: After pretesting is complete, provide a letter certifying the installation is complete and fully operable, including the names and titles of witnesses to preliminary tests. Provide documentation of specific examples of the various tests via FACU event logs or other data capture means.

Q. Engineer’s Test: After the pretest has been completed and the system is clear of trouble all test documentation including a printout of all custom labels and a NFPA 72 “Record of Completion” form shall be submitted to Engineer for approval. At that time Engineer may, at his discretion, perform a 100% functional test of the fire alarm system. The Contractor and the Manufacturer’s authorized representative that installed the system must be present. Should the results of this test not be satisfactory, then corrections will be made, and a re-test will be required at the Contractor’s expense.

R. Authority Having Jurisdiction Inspection/Test: Only after Engineer has approved the system the design professional will schedule the inspection. The Contractor and the Manufacturer’s authorized representative must be present for test. Provide a minimum of 10 days' notice in writing to the Engineer for the Authority Having Jurisdiction Inspection/Test.

S. Retesting: Correct deficiencies indicated by tests and completely retest work affected by such deficiencies. Verify by the system test that the total system meets Specifications and complies with applicable standards.

T. Report of Tests and Inspections: Provide a written record of inspections, tests, and detailed test results in the form of a test log. Submit log on the satisfactory completion of tests.

U. Closeout: After successful completion of inspections and tests, the warranty period begins. In the event of malfunctions or excessive nuisance alarms, the Contractor must take prompt corrective action. The Owner may require a repeat of the Contractor’s 100% system test, or other inspections. Continued improper performance during the warranty period shall be cause to require the Contractor to remove and replace the system.

V. All System documentation shall be provided and housed in a Documentation Cabinet at the control panel or other approved location.

3.11 OWNER PERSONNEL INSTRUCTION

A. Provide the following instruction to designated Owner personnel:
   1. Hands-On Instruction: On-site, using operational system.
   2. Classroom Instruction: Owner furnished classroom, on-site or at other local facility.

B. Administrative: One-hour session(s) covering issues necessary for non-technical administrative staff; classroom:
   1. Initial Training: 1 session pre-closeout.
   2. Refresher Training: 1 session post-occupancy.

C. Basic Operation: One-hour sessions for attendant personnel, security officers, and engineering staff; combination of classroom and hands-on:
   1. Initial Training: 1 session pre-closeout.
   2. Refresher Training: 1 session post-occupancy.

D. Detailed Operation: Two-hour sessions for engineering staff; assume NICET level I qualifications or equivalent; combination of classroom and hands-on:
   1. Initial Training: 1 session pre-closeout.
   2. Refresher Training: 1 session post-occupancy.

E. Maintenance Technicians: Detailed training for electrical technicians, on programming, maintaining, repairing, and modifying; factory training:
   1. Initial Training: One 3-day session, pre-closeout.
   2. Refresher Training: One 1-day session post-occupancy.

F. Furnish the services of instructors and teaching aids; have copies of operation and maintenance data available during instruction.

G. Provide means of evaluation of trainees suitable to type of training given; report results to Owner.

3.12 CLOSEOUT

A. Closeout Demonstration: Demonstrate proper operation of all functions to Owner.
   1. Be prepared to conduct any of the required tests.
   2. Have at least one copy of operation and maintenance data, preliminary copy of project record drawings, input/output matrix, and operator instruction chart(s) available during demonstration.
   3. Have authorized technical representative of control unit manufacturer present during demonstration.
   4. Demonstration may be combined with inspection and testing required by authority having jurisdiction; notify authority having jurisdiction in time to schedule demonstration.
   5. Repeat demonstration until successful.

B. Occupancy of the project will not occur prior to Substantial Completion.

C. Substantial Completion of the project cannot be achieved until inspection and testing is successful and:
   1. Specified diagnostic period without malfunction has been completed.
   2. Approved operating and maintenance data has been delivered.
   3. Spare parts, extra materials, and tools have been delivered.
   4. All aspects of operation have been demonstrated to Owner.
   5. Final acceptance of the fire alarm system has been given by authorities having jurisdiction.
   6. Occupancy permit has been granted.
   7. Specified pre-closeout instruction is complete.

D. Perform post-occupancy instruction within 3 months after Substantial Completion.

3.13 SOFTWARE SERVICE AGREEMENT

A. Comply with UL 864.

B. Technical Support: Beginning at Substantial Completion, service agreement shall include software support for two years.

C. Upgrade Service: At Substantial Completion, update software to latest version. Install and program software upgrades that become available within [two] years from date of Substantial

Completion. Upgrading software shall include operating system and new or revised licenses for using software.

1. Upgrade Notice: At least 30 days to allow Owner to schedule access to system and to upgrade computer equipment if necessary.

D. Provide to Owner, at no extra cost, a written maintenance contract for entire manufacturer's warranty period, to include the work described below.

E. Initial Maintenance Service: Beginning at Substantial Completion, maintenance service shall include 12 months' full maintenance by trained employees of manufacturer's designated service organization. Include preventive maintenance, repair or replacement of worn or defective components, lubrication, cleaning, and adjusting as required for proper operation. Parts and supplies shall be manufacturer's authorized replacement parts and supplies.

F. Provide to Owner, a proposal as an alternate to the base bid, for a maintenance contract for entire warranty period, to include the work described below; include the total cost of contract, proposal to be valid at least until 30 days after date of Substantial Completion.

G. Perform routine inspection, testing, and preventive maintenance required by NFPA 72, including:

1. Include visual inspections according to the "Visual Inspection Frequencies" table in the "Testing" paragraph of the "Inspection, Testing and Maintenance" chapter in NFPA 72.
2. Perform tests in the "Test Methods" table in the "Testing" paragraph of the "Inspection, Testing and Maintenance" chapter in NFPA 72.
3. Perform tests per the "Testing Frequencies" table in the "Testing" paragraph of the "Inspection, Testing and Maintenance" chapter in NFPA 72.
4. Maintenance of fire safety interface and supervisory devices connected to fire alarm system.
5. Repairs required, unless due to improper use, accidents, or negligence beyond the control of the maintenance contractor.
6. Record keeping required by NFPA 72 and authorities having jurisdiction.

H. Provide trouble call-back service upon notification by Owner:

1. Provide on-site response within 2 hours of notification.
2. Include allowance for call-back service during normal working hours at no extra cost to Owner.
3. Owner will pay for call-back service outside of normal working hours on an hourly basis, based on actual time spent at site and not including travel time; include hourly rate and definition of normal working hours in maintenance contract.

I. Provide a complete description of preventive maintenance, systematic examination, adjustment, cleaning, inspection, and testing, with a detailed schedule.

J. Maintain a log at each fire alarm control unit, listing the date and time of each inspection and call-back visit, the condition of the system, nature of the trouble, correction performed, and parts replaced. Submit duplicate of each log entry to Owner's representative upon completion of site visit.

K. Comply with Owner's requirements for access to facility and security.

END OF SECTION 284600

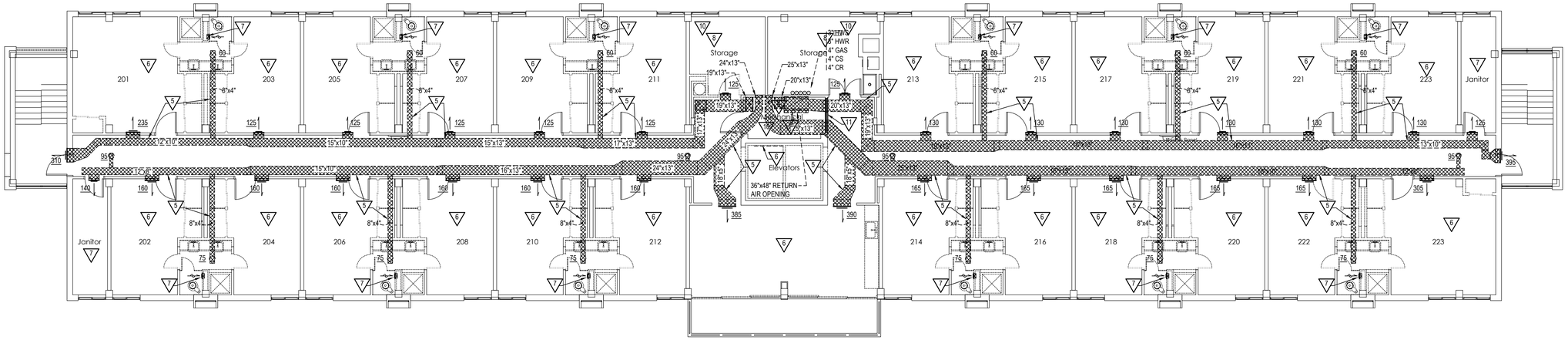

2 SECOND FLOOR PLAN - H.V.A.C. DEMOLITION

MD101R1 1/8" = 1'-0"

DEMOLITION NOTES:

1. REMOVE EXISTING EXHAUST FAN, RELATED DUCT, CURB, ELECTRICAL CONNECTION, CONTROLS, ETC. PROVIDE INSULATED WATER-TIGHT CAP OVER EXISTING CURB OPENING.
2. REMOVE EXISTING DRYER VENTS AND RELATED CAPS.
3. REMOVE EXISTING HEATING WATER PUMPS AND ALL RELATED PIPING, CONTROLS, ELECTRICAL CONNECTION, EQUIPMENT PADS, ETC.
4. REMOVE EXISTING WATER HEATER COMBUSTION AIR PIPING AND FLUE PIPING.
5. REMOVE EXISTING SUPPLY DUCT AND ALL RELATED HANGERS, DIFFUSERS, ETC.
6. REMOVE EXISTING RETURN DUCT, HANGERS, RETURN GRILLES, DOOR GRILLES, ETC.
7. REMOVE EXISTING EXHAUST DUCT, HANGERS, GRILLES, ETC.
8. REMOVE ALL EXISTING CHILLED AND HEATING WATER PIPING, RELATED HANGERS/SUPPORTS, ETC.
9. REMOVE OUTSIDE AIR HANDLING UNIT, ALL RELATED DUCT, PIPING CONNECTIONS, CONTROLS, ELECTRICAL CONNECTIONS, LOUVERS, CONCRETE EQUIPMENT PADS, ETC.
10. REMOVE ALL EXISTING OUTSIDE AIR DUCT, HANGERS, DIFFUSERS, ETC.
11. REMOVE EXISTING RETURN AIR WALL GRILLE. PATCH WALL TO MATCH EXISTING MATERIALS. COORDINATE WITH ARCHITECTURAL.
12. REMOVE EXISTING FLOOR TRANSFER GRILLES. ABANDON TRANSFER DUCT BELOW FLOOR. PATCH/FILL FLOOR OPENINGS AS DIRECTED BY ARCHITECT.

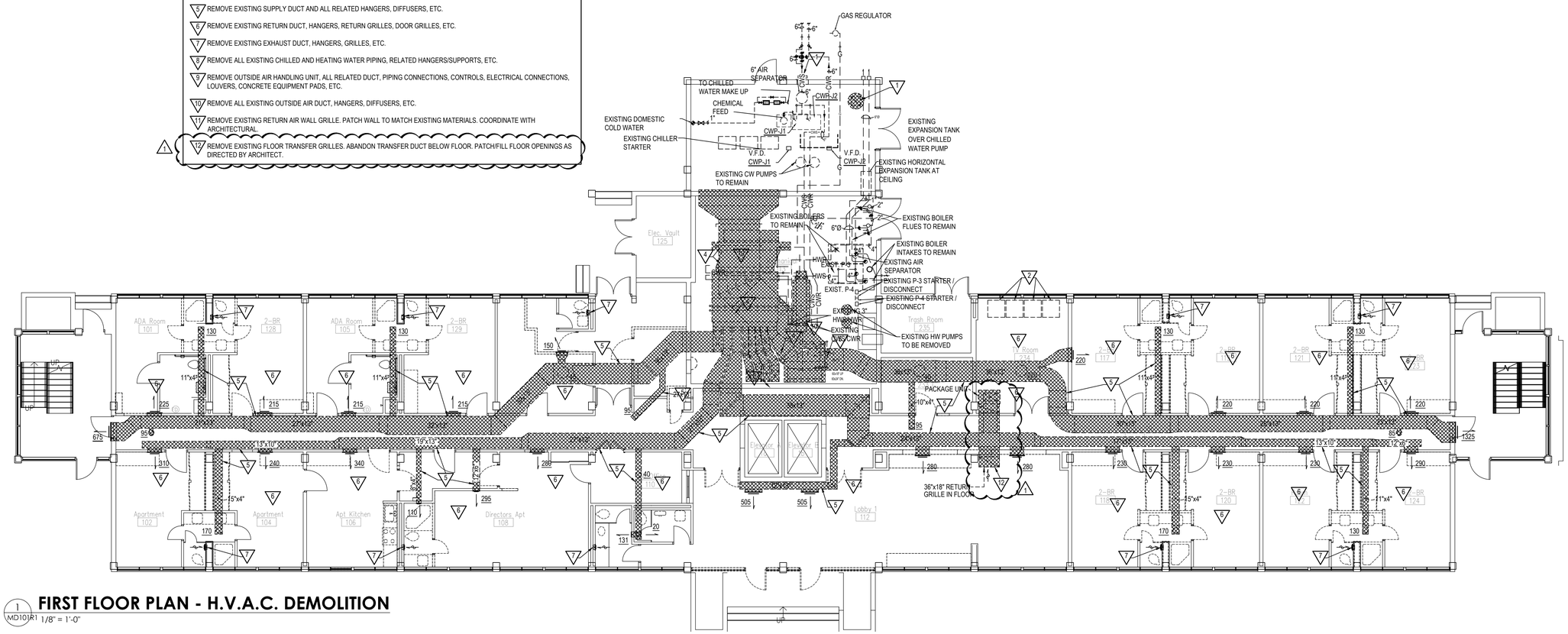

1 FIRST FLOOR PLAN - H.V.A.C. DEMOLITION

MD101R1 1/8" = 1'-0"

GS# 104-215 JONES HALL RENOVATIONS (RE-BID)

Mississippi University for Women

DONALD L. GREEN
No. 13803
PROFESSIONAL ENGINEER
STATE OF MISSISSIPPI
10.03.2025

SHAFER ZAHNER ZAHNER
OFFICE OF ARCHITECTURE
510 UNIVERSITY DRIVE
STARKVILLE, MISSISSIPPI 39759
szzarch.com T(662) 323-1628

SHEET MD101R1

FIRST & SECOND FLOOR PLAN - H.V.A.C. DEMOLITION

DATE:	10.03.2025
SZZARCH#	2414
DRAWN BY:	TEG/CDJ
CHECKED BY:	DLG/TEG

REVISIONS:

1 11/4/2025 ADDENDUM #2

Panel: MPL1 **Enclosure:** NEMA 1 **Volts:** 120/208 Wye **Bus Rating:** 800 A **A.I.C. Rating:** 42,000
Location: MECHANICAL ROOM **Mounting:** SURFACE **Phases:** 3 **Main Device Type:** MLO
Fed From: SERVICE DISC. #1 **Wires:** 4 **Main Device Size:** -- **Fault Current:** 21,250

Cubicle No.	Description	Phase Load (VA) A	B	C	Connected Load (VA)	Connected Current (A)	Trip (A)	Poles	Notes
1	L-PH	16091	15681	12068	43841	122	225	3	
2	L-1A	29701	32516	29209	91426	254	225	3	
3	L-1B	29553	23771	22968	76292	212	225	3	
4	L-1D	14220	15500	14180	43900	122	150	3	
5	SPD	--	--	--	--	--	60	3	
6	225 A PREPARED SPACE	--	--	--	--	--	--	3	
7	225 A PREPARED SPACE	--	--	--	--	--	--	3	
8	100 A PREPARED SPACE	--	--	--	--	--	--	3	
9	100 A PREPARED SPACE	--	--	--	--	--	--	3	
10	100 A PREPARED SPACE	--	--	--	--	--	--	3	
	Total Phase Connected Load (VA):	89566 VA	87470 VA	78426 VA					
	Total Phase Connected Current (A):	758 A	741 A	654 A					

Load Classification	Connected Load (VA)	Demand Factor	Estimated Demand (VA)	Panel Totals:	
Electric Clothes Dryer	40000 VA	60.00%	24000 VA	**Total Connected Load (VA):**	255462 VA
Lighting	15212 VA	125.00%	19015 VA	**Total Demand Load (VA):**	168405 VA
Power	500 VA	100.00%	500 VA	**Total Connected Current (A):**	709 A
Receptacle	159700 VA	53.13%	84850 VA	**Highest Connected Phase Current (A):**	758 A
HVAC	40103 VA	100.00%	40103 VA	**Total Demand Current (A):**	467 A

Notes:

Panel: MPL2 **Enclosure:** NEMA 1 **Volts:** 120/208 Wye **Bus Rating:** 1000 A **A.I.C. Rating:** 42,000
Location: MECHANICAL ROOM **Mounting:** SURFACE **Phases:** 3 **Main Device Type:** MLO
Fed From: SERVICE DISC. #2 **Wires:** 4 **Main Device Size:** -- **Fault Current:** 22,240

Cubicle No.	Description	Phase Load (VA) A	B	C	Connected Load (VA)	Connected Current (A)	Trip (A)	Poles	Notes
1	L-1C	59318	53484	54204	167006	464	600	3	
2	ELEVATOR A	14440	14440	14440	43320	120	125	3	SHUNT TRIP
3	ELEVATOR B	14440	14440	14440	43320	120	125	3	SHUNT TRIP
4	P-1	2904	2904	2904	8712	24	60	3	
5	P-2	2904	2904	2904	8712	24	60	3	
6	SPD	--	--	--	--	--	60	3	
7	225 A PREPARED SPACE	--	--	--	--	--	--	3	
8	225 A PREPARED SPACE	--	--	--	--	--	--	3	
9	100 A PREPARED SPACE	--	--	--	--	--	--	3	
10	100 A PREPARED SPACE	--	--	--	--	--	--	3	
	Total Phase Connected Load (VA):	94007 VA	88173 VA	88904 VA					
	Total Phase Connected Current (A):	784 A	735 A	742 A					

Load Classification	Connected Load (VA)	Demand Factor	Estimated Demand (VA)	Panel Totals:	
Heating	7318 VA	100.00%	7318 VA	**Total Connected Load (VA):**	271079 VA
Lighting	7150 VA	125.00%	8937 VA	**Total Demand Load (VA):**	262896 VA
Lighting - Exterior	1120 VA	125.00%	1400 VA	**Total Connected Current (A):**	752 A
Motor	119140 VA	101.83%	121318 VA	**Highest Connected Phase Current (A):**	784 A
Power	101510 VA	100.00%	101510 VA	**Total Demand Current (A):**	730 A
Receptacle	34720 VA	64.40%	22360 VA		
HVAC	408 VA	100.00%	408 VA		

Notes:

SERVICE DISCONNECT 1 OF 2 - MPL1 208V
3 PHASE, 4 WIRE 1000 A

SERVICE DISCONNECT
#1 LABEL - DETAIL

SERVICE DISCONNECT 2 OF 2 - MPL2 208V
3 PHASE, 4 WIRE 800 A

SERVICE DISCONNECT
#2 LABEL - DETAIL

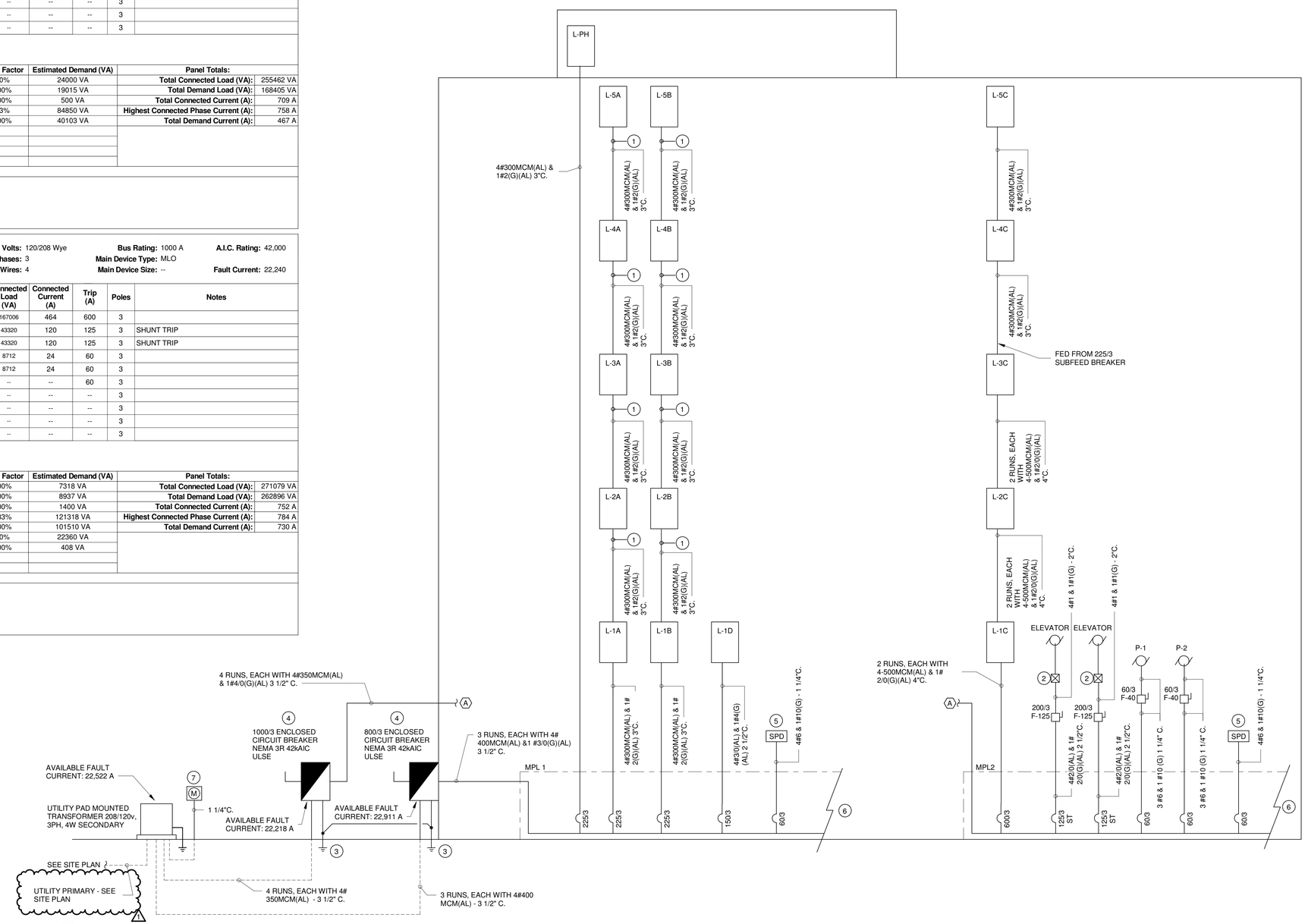

RISER DIAGRAM SYMBOLS

- STATIONARY CIRCUIT BREAKER
- STATIONARY SWITCH
- STATIONARY FUSE
- GROUND
- ENCLOSURE
- PANELBOARD
- PAD MOUNTED TRANSFORMER
- SPD SURGE SUPPRESSION DEVICE
- FEEDER/SERVICE
- NO CONNECTION
- CONNECTED

1 E005 ELECTRICAL RISER DIAGRAM
NOT TO SCALE

ELECTRICAL RISER DIAGRAM KEYNOTES:

1. REUSE EXISITING CONDUIT MADE AVAILABLE FROM DEMOLITION OF THE EXISITING FEEDER. EXTEND CONDUIT FROM ORIGINAL SWITCHBOARD LOCATION TO NEW MPL1 LOCATION AS REQUIRED.
2. ELEVATOR CONTROLLER. FIELD VERIFY EXACT CONNECITON LOCATION TO RECONNECT THE EXISTING ELEVATORS.
3. SEE GROUNDING DETAIL
4. PROVIDE ENERGY-REDUCING MAINTENANCE SWITCHING WITH LOCAL STATUS INDICATOR FOR ALL BREAKERS 1200 AMPERES OR HIGHER AS PER NEC 240.87.
5. MOUNT SURGE SUPPRESSOR ADJACENT TO PANEL. LEAD LENGTH NOT TO EXCEED 12 INCHES. CONNECT TO 30/3 BREAKER UNLESS OTHERWISE SHOWN.
6. SEE PANEL SCHEDULE FOR ALL SPARES AND SPACES.
7. UTILITY METER PER UTILITY SPECIFICATIONS. COORDINATE SPECIFICATIONS AND REQUIREMENTS WITH UTILITY.

Dewberry
1900 Lakeland Drive
Jackson, MS 39216
(601) 362-6478
www.dewberry.com

Project Number : 50171832

GS# 104-215 JONES HALL RENOVATIONS (RE-BID)

Mississippi University for Women

ALFRED MICHAEL MAYO
LICENSED PROFESSIONAL ENGINEER
34960
11/03/2025
STATE OF MISSISSIPPI

SHAFER ZAHNER ZAHNER
OFFICE OF ARCHITECTURE
510 UNIVERSITY DRIVE
STARKVILLE, MISSISSIPPI 39759
szzarch.com T(662) 323-1628

SHEET E005

ELECTRICAL RISER DIAGRAM

DATE:	10.03.2025
SZZARCH#	2414
DRAWN BY:	GJC
CHECKED BY:	AMM

REVISIONS:
1 11/3/2025 Addendum #1

C:\Users\gcase\Documents\revit local\50171832-E-R24_gcaseV5H8K.rvt

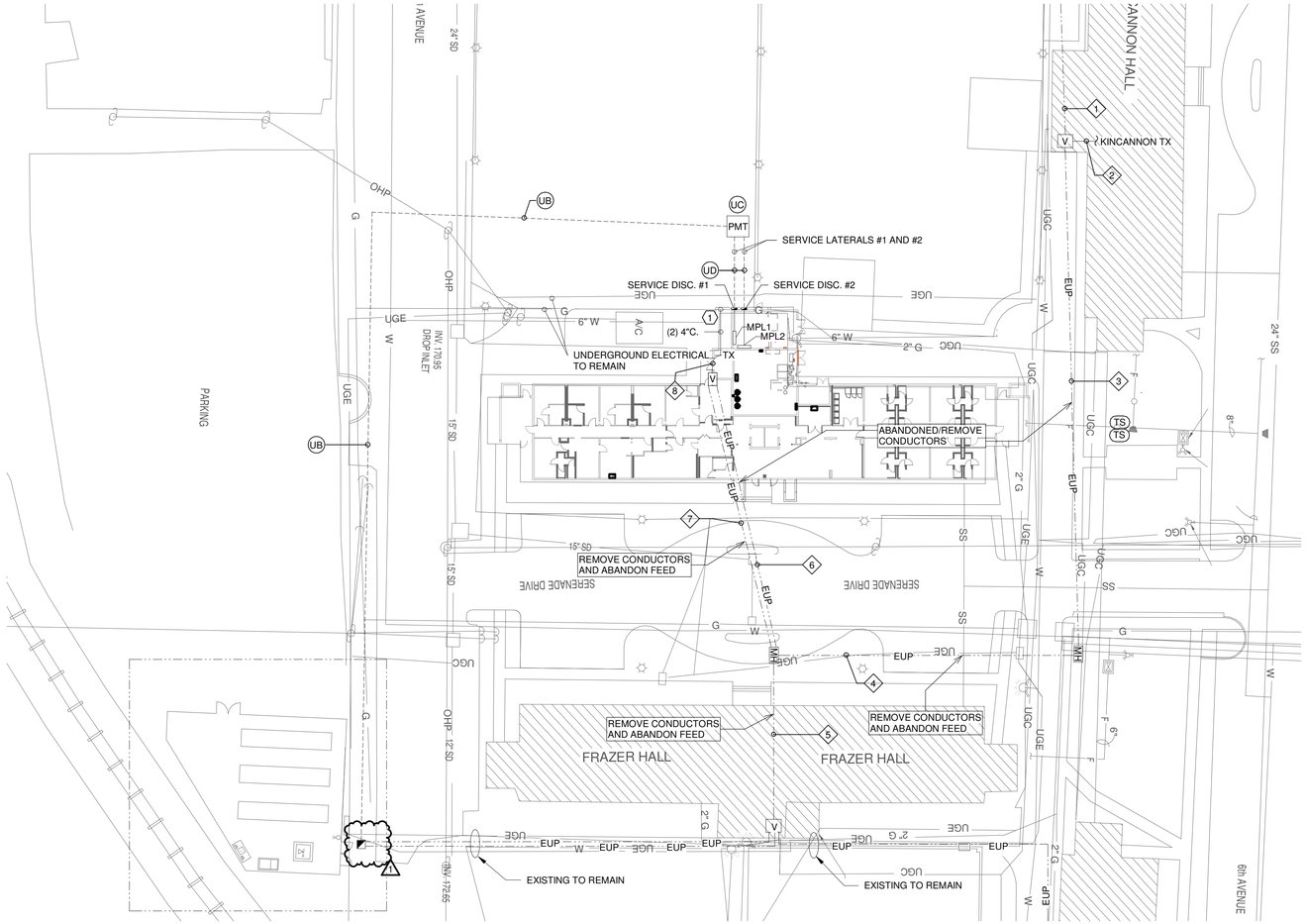

1 E009 ELECTRICAL SITE PLAN
1" = 30'-0"

NORTH

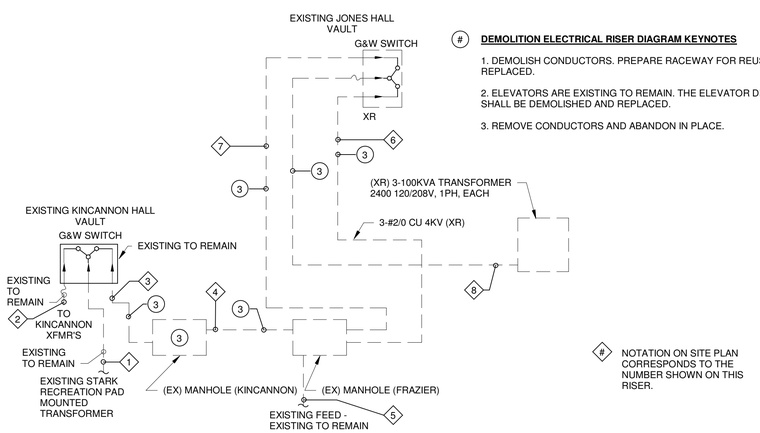

3 E009 PARTIAL RISER DIAGRAM
NOT TO SCALE

DEMOLITION ELECTRICAL RISER DIAGRAM KEYNOTES

1. DEMOLISH CONDUCTORS. PREPARE RACEWAY FOR REUSE WHERE PANELS ARE BEING REPLACED.

2. ELEVATORS ARE EXISTING TO REMAIN. THE ELEVATOR DISCONNECTS AND FEEDERS SHALL BE DEMOLISHED AND REPLACED.

3. REMOVE CONDUCTORS AND ABANDON IN PLACE.

NOTATION ON SITE PLAN CORRESPONDS TO THE NUMBER SHOWN ON THIS RISER.

SITE POWER AND TELEPHONE NOTES:

UA NOT USED

UB (3) 3" SCHEDULE 80 PVC FOR HIGH VOLTAGE SERVICE - BOTH PRIMARY WIRING AND CONDUIT BY COLUMBUS POWER AND LIGHT UTILITY

UC TRANSFORMER SLAB-BOX WITH TRAFFIC GUARDS PER UTILITY COMPANY REQUIREMENTS. VERIFY SIZE, LOCATION AND ORIENTATION WITH UTILITY COMPANY.

UD SECONDARY FROM TRANSFORMER TO MAIN DISCONNECT. VERIFY ROUTING WITH UTILITY COMPANY AND ROUTE TO CLEAR STRUCTURAL FOOTING. SEE RISER DIAGRAM.

1. ALL UTILITY SERVICE SHALL BE VERIFIED WITH THE UTILITY COMPANY PRIOR TO BIDDING AND ALL RESULTING COSTS SHALL BE INCLUDED IN BID.

2. ACTUAL INSTALLATION OF ALL UTILITY SERVICES SHALL BE ACCORDING TO FINAL UTILITY COMPANY PLANS. SEE "UTILITY NOTES".

3. UTILITY CONTACTS:

ELECTRIC UTILITY - COLUMBUS LIGHT; MARC RUSHING; MRUSHING@COLUMBUS-LW.COM; CELL 662-386-5545; OFFICE 662-243-7440 X169

GENERAL UTILITY AND SITE WORK NOTES:

FOR POWER SERVICE:

A. CONTRACTOR WILL PROVIDE (2)-5"C FOR HIGH VOLTAGE CIRCUITS FROM PROPERTY LINE TO TRANSFORMER SLABS. CONDUIT TO BE 48" DEEP AND TERMINATED IN ACCORDANCE WITH UTILITY COMPANY REQUIREMENTS INCLUDING TRENCHING AND BACKFILL TO 90% COMPACTION.

B. CONTRACTOR WILL PROVIDE TRANSFORMER SLABS INSTALLED COMPLETE IN ACCORDANCE WITH UTILITY COMPANY REQUIREMENTS.

C. CONTRACTOR WILL PROVIDE SECONDARY CONDUITS FOR LOW VOLTAGE CIRCUITS FROM TRANSFORMER SLABS TO BUILDING EQUIPMENT ROOMS, CONDUIT TO BE 48" DEEP AND TERMINATED IN ACCORDANCE WITH PLANS AND SPECIFICATIONS.

D. PROVIDE PULLWIRE IN ALL EMPTY CONDUITS.

E. USE JOINT TRENCHING WHEREVER POSSIBLE.

F. CONCRETE SEMI-ENCASEMENT REQUIRED WHENEVER QUANTITY OF POWER DUCTS EXCEEDS TWO.

GENERAL:

AA. ALL UNDERGROUND AND OVERHEAD COMMUNICATIONS AND POWER SHALL REMAIN UNLESS OTHERWISE NOTED ON THIS PLAN.

BB. COORDINATE WITH CIVIL SURVEY. ALL SURROUNDING AREAS WITHIN THE SCOPE OF WORK SHALL HAVE CIRCUITS MARKED PRIOR TO ANY SITE WORK BEGINNING.

CC. SEE SHEET E100 FOR ADDITIONAL NOTES ABOUT DEMOLITION AND THE EXISTING CHILLER SYSTEM. THIS INLCUDES DEMOLITION OF THE EXISTING MEDIUM VOLTAGE SYSTEM.

DD. CONTRACTOR SHALL BE RESPONSIBLE FOR INCLUDING ALL MATERIALS AND TIME TO REPAIR ANY DISTURBANCE TO THE SITE AS A RESULT OF NEW ELECTRICAL TRENCHING, BORING, ETC.

KEYNOTES:

1 APPROXIMATE LOCATION OF EXISTING HANDHOLE WHERE FIBER IS LOCATED. PROVIDE (2) 4" CONDUITS WITH PULLSTRINGS FROM EXISTING HANDHOLE TO NEW MDF ROOM. FIELD VERIFY EXACT LOCATION. FIBER TO BE REPULLED THROUGH CONDUITS BY STATE ITS. COORDINATE WITH STATE ITS AND OWNER. ALL CONDUIT STUB-UP AND CAPPED 12"A.F.F. IN BUILDING. CONDUIT TO BE 24" DEEP. USE JOINT TRENCHING WHEREVER POSSIBLE.

SITE ELECTRICAL

PMT	PAD MOUNTED TRANSFORMER
PMS	PAD MOUNTED SWITCH
MH	MANHOLE
HH	HANDHOLE
P	UTILITY POLE
EUP	UNDERGROUND ELECTRICAL PRIMARY (OWNED BY COLLEGE)

Dewberry
1900 Lakeland Drive
Jackson, MS 39216
(601) 362-6478
www.dewberry.com
Project Number : 50171832

GS# 104-215 JONES HALL RENOVATIONS (RE-BID)

Mississippi University for Women

FRED MICHAEL MAHOLAND LICENSED PROFESSIONAL ENGINEER 34960 11/03/2025 STATE OF MISSISSIPPI

SHAFER ZAHNER ZAHNER
OFFICE OF ARCHITECTURE
510 UNIVERSITY DRIVE
STARKVILLE, MISSISSIPPI 39759
szzarch.com T(662) 323-1628

SHEET E009

ELECTRICAL SITE PLAN

DATE:	10.03.2025
SZZARCH#	2414
DRAWN BY:	GJC
CHECKED BY:	AMM

REVISIONS:
1 11/3/2025 Addendum #1

C:\Users\gcase\Documents\revit local\50171832-E-R24_gcaseV5H8K.rvt

1 E401 FIRE ALARM - 1ST FLOOR PLAN - DEMOLITION
1/8" = 1'-0"

2 E401 FIRE ALARM - 1ST FLOOR PLAN
1/8" = 1'-0"

GENERAL NOTES: TYPICAL FOR ALL AUXILIARY SHEETS

A. SEE SITE PLAN FOR ADDITIONAL FIRE ALARM DEVICES.

B. LOW VOLTAGE CABLING (EXCLUDING FIRE ALARM) SHALL BE SUPPORTED ABOVE ACCESIBLE CEILING THROUGH J-HOOKS. PROVIDE J-HOOKS TO ALL AUXILIARY OUTLETS SO THAT NO CABLE IN UNSUPPORTED MORE THAN 5'-0". ALL CONCEALED CABLING SHALL BE IN CONDUIT. ALL EXPOSED RACEWAY SHALL BE WIREMOLD.

C. FIRE ALARM CABLING SHALL BE IN CONDUIT. SEE SPECIFICATIONS. 1

D. PROVIDE FIRE ALARM DIALER AS REQUIRED BY AHJ AND OWNER. COORDINATE INSTALLATION AND SET UP WITH OWNER.

E. PROVIDE DUCT DETECTORS FOR SUPPLY AND RETURN DUCTS OF ALL HVAC UNITS OVER 2000 CFM. COORDINATE INSTALLATION WITH MECHANICAL.

SHEET KEYNOTES:

1. PROVIDE COMBINATION CARBON MONOXIDE/SMOKE DETECTOR WITH LOW FREQUENCY SOUNDER CONNECTED TO THE FIRE ALARM SYSTEM IN ACCORDANCE TO IBC 907.2.11.7 AND NFPA 72 2019 18.4.6.3. THE WAVEFORM SHALL HAVE A FUNDAMENTAL FREQUENCY OF 520 HZ +/- 10 PERCENT. THE NOTIFICATION EQUIPMENT SHALL BE LISTED FOR PRODUCING THE LOW FREQUENCY WAVEFORM. DEVICE SHALL BE LISTED TO UL 268.
2. SECONDARY RECALL
3. FIREMAN'S HAT
4. FOR HOOD SHUTOFF
5. PRIMARY RECALL

GS# 104-215 JONES HALL RENOVATIONS (RE-BID)

Mississippi University for Women

REGISTERED PROFESSIONAL ENGINEER MICHAEL MAOLAN MAI 34960 11/03/2025 STATE OF MISSISSIPPI

SHAFER ZAHNER ZAHNER
OFFICE OF ARCHITECTURE
510 UNIVERSITY DRIVE
STARKVILLE, MISSISSIPPI 39759
szzarch.com T(662) 323-1628

SHEET E401

FIRE ALARM - 1ST FLOOR PLAN

DATE: 10.03.2025
SZZARCH# 2414
DRAWN BY: GJC
CHECKED BY: AMM

REVISIONS:
1 11/3/2025 Addendum #1

Dewberry
1900 Lakeland Drive
Jackson, MS 39216
(601) 362-6478
www.dewberry.com

Project Number : 50171832

C:\Users\gcase\Documents\revit local\50171832-E-R24_gcaseV5H8K.rvt